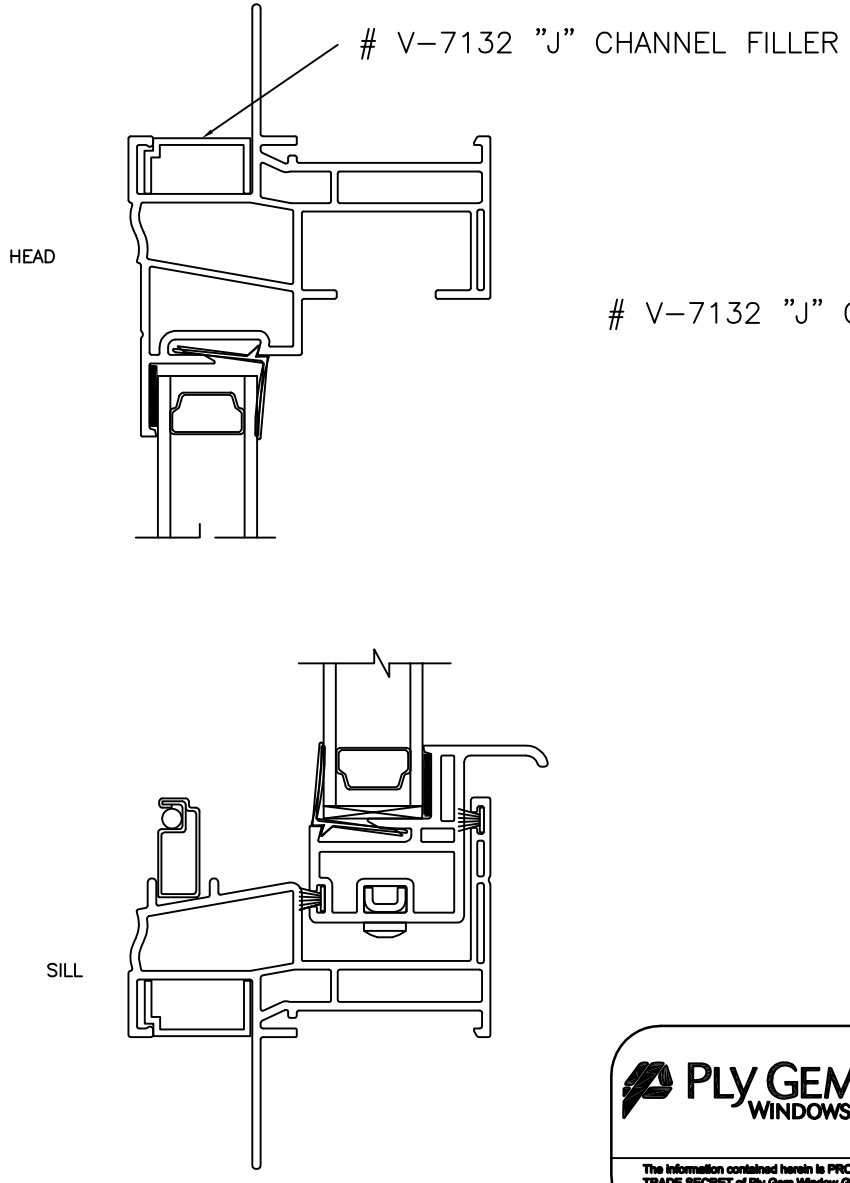

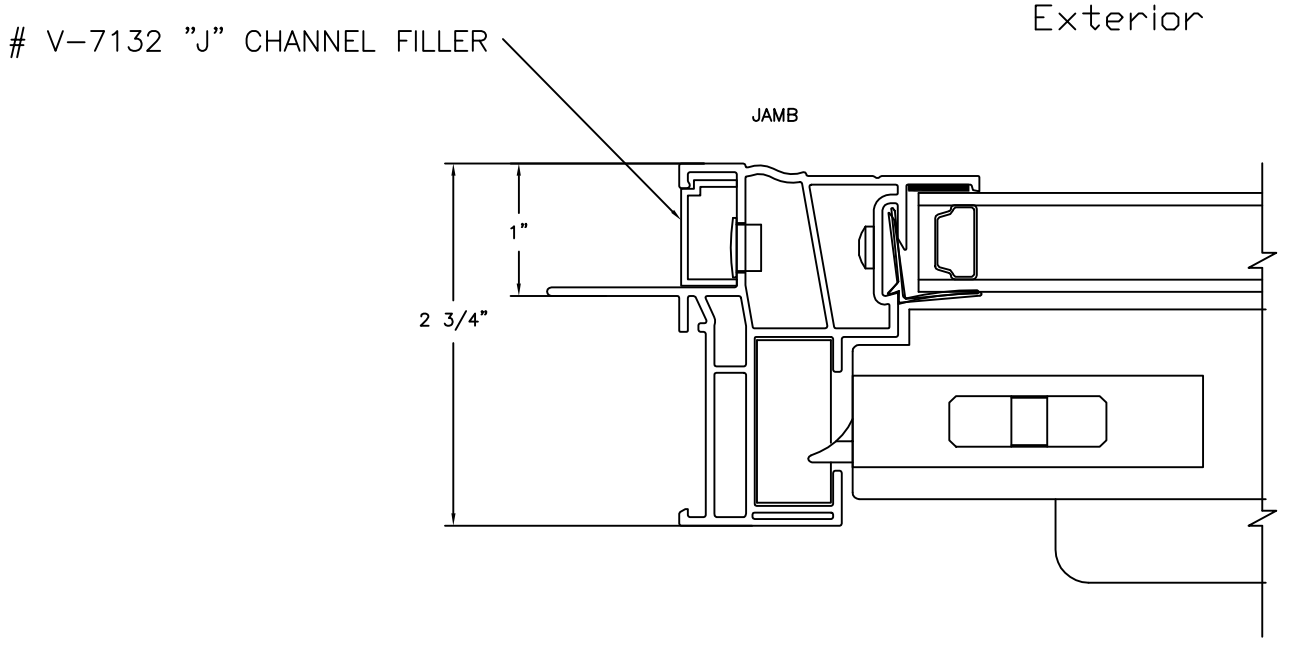

PLY GEM WINDOWS

Tolerances Unless Otherwise Specified. All Dimensions originate at sharp corners unless indicated.
XJXX ± 0.005, XJX ± 0.015
FRACTIONAL ± 1/64"
ANGLES ± 1.0°
FLATNESS ± 0.020 per ft.
NOTE: BOXED/CIRCLED DIMS ARE CRITICAL

The information contained herein is PROPRIETARY to and considered a TRADE SECRET of Ply Gem Window Group, a Roanoke, VA based firm, and shall not be reproduced in whole or in part without the written authorization of Ply Gem Window Group.

REV.	ECO	REVISION	DATE	BY

DWG. FILE NAME: U:/Extrusion/

SCALE:	DRAWN BY:	REV: A
SHEET SIZE:	DATE:	

DESCRIPTION: 1110/1115 WITH "J" CHANNEL FILLER