Carport Materials List:
Uprights x 4: 4x4x1/4 square metal tubing
Headers x2 : Doubled 8" metal C channel
Purlins: x7: 8" metal C channel
Roofing: Metal R-Panel

Wood facade Materials List:
Uprights: Wrapped in 2x6 and 2x4 weather treated lumber, ripped as needed to conform to tubing.
Headers and outer purlins: Faced with 2x10 weather treated lumber.

Paint: Lumber primed and painted to match garage

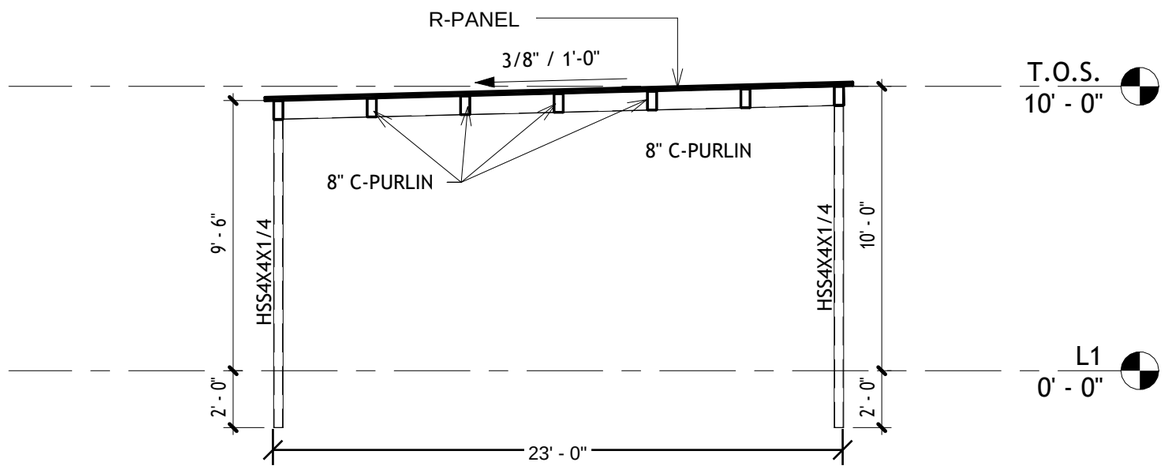

2 SECTION
3/16" = 1'-0"

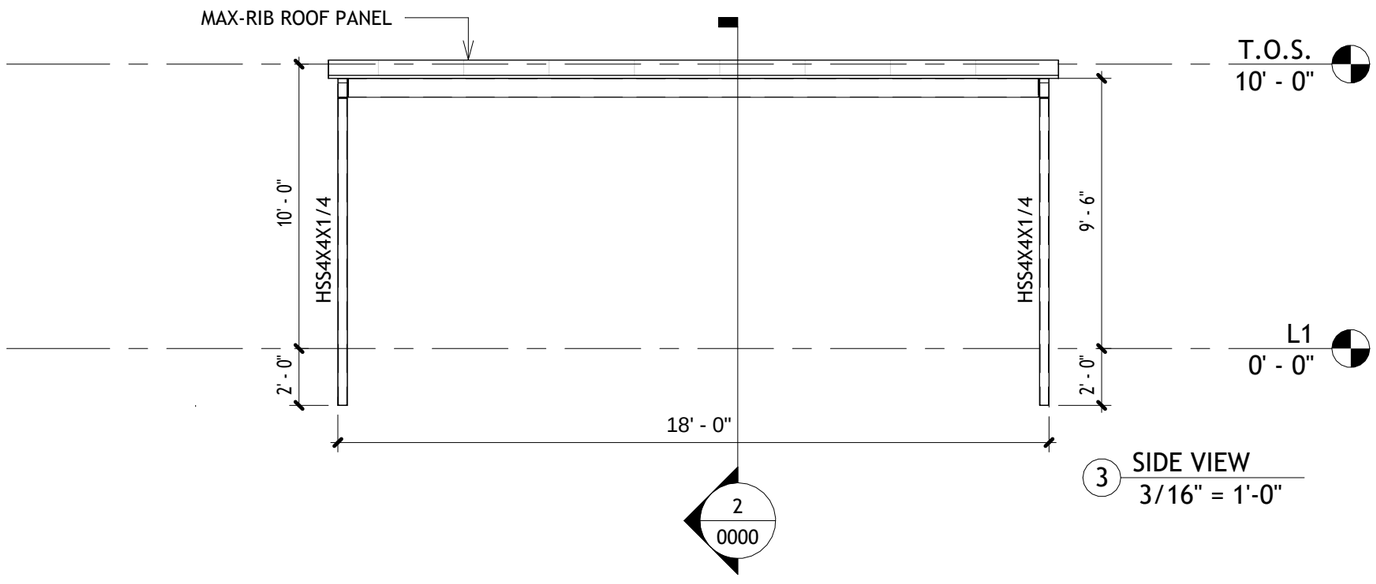

3 SIDE VIEW
3/16" = 1'-0"

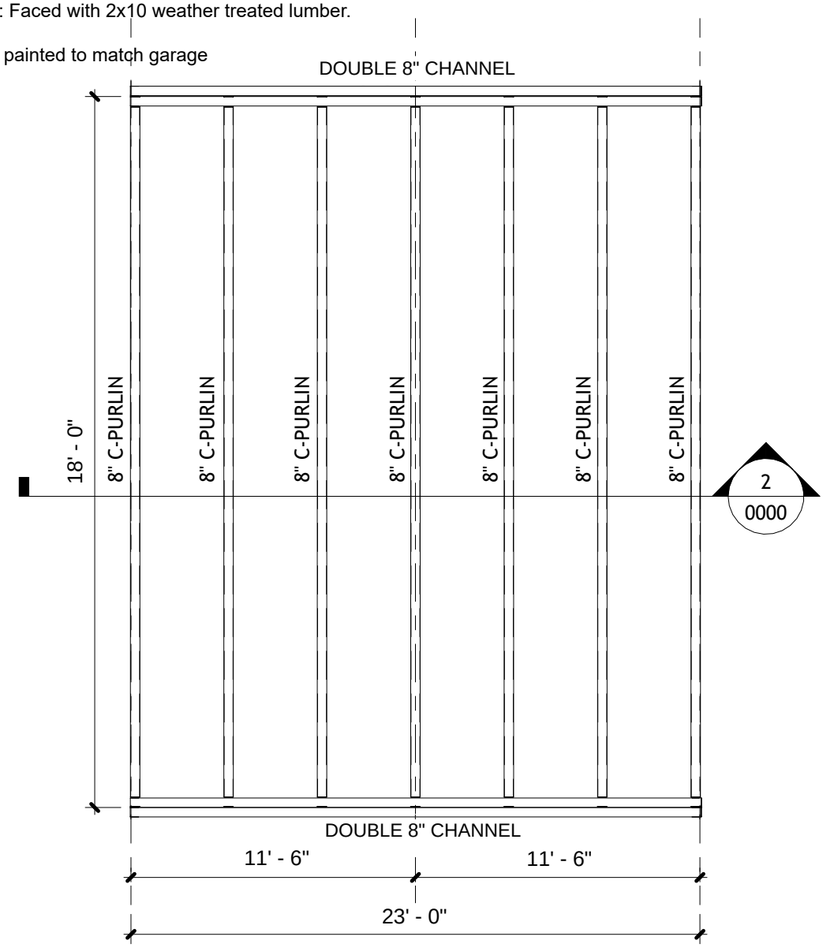

1 OVERHEAD VIEW
3/16" = 1'-0"

This document embodies subject matter that is proprietary to Alamo City Custom Welding and const. This information may not be used, reproduced, published, disseminated or disclosed to others in whole or in part for any purpose or reason, without express permission in writing. possession does not provide any license otherwise, either express or implied. All rights are reserved.

REVISIONS

REV	DATE	DRAWN BY	APPROVED BY

SHEET SIZE
11X17

Alamo City Custom Welding and Construction
930 Peggy Dr.* San Antonio, Texas 78219
Phone: (210) 233-6340 * email: admin@alamocitycustomwelding.com

ACCW - CAR PORT

CAR PORT - FLAT

SCALE	JOB #	DRAWING #	REV
	0000	0000	

6/4/2026 12:45:41 PM