

DRAWING INDEX

G1.1 Cover Page/Drawing Index
Existing Conditions Photos

Plans

A1.2 Roof Plan
A1.3 Floor Plan - First
A1.4 Floor Plan - Second
A1.5 Floor Plan - Third Floor

Elevations

A2.1 Building Elevations - North & East
A2.2 Building Elevations - South & West

Sections

A3.1 Wall Sections

Details

A5.1 New Exterior Door and Window Details

THESE DRAWINGS ARE FOR USE SOLELY WITH RESPECT TO THIS PROJECT NO REPRODUCTIONS, PUBLISHING OR USE IN ANY WAY MAY BE DONE WITH OUT THE WRITTEN PERMISSION OF THE ARCHITECT.

REQUESTS

Final Approval

Item *1:* Roof Replacement

- Replace the deteriorated roofing in kind across all three roof types.
- Page Reference: A1.2, a1.5, a2.1, a2.2

Item *2:* First Floor Porch Enclosure

- Enclosed the existing first floor porch with painted wood siding and fixed glazing, adding a new glass door and keeping the existing columns, porch structure, entry stair and horizontal detailing.
- Page Reference: a1.3, a2.1, a2.2, A3.1, A5.1

Item *3:* Second Floor Porch Enclosure

- Enclose the existing second floor porch with wood windows above the railing and painted horizontal wood siding below it, keep the existing columns, balustrade, railing and stair.
- Page Reference: a1.2, a2.1, a2.2, A3.1, A5.1

Item *4:* New Wood Shutters

- Install new painted, fully operable wood shutters to provide privacy and accommodate the interior room layout, keeping all existing windows and trim.
- Page Reference: a2.1, a2.2, A3.1, A5.1

Item *5:* Relocation of Historic Door Assembly

- Move the historic kitchen door assembly from the north elevation to an existing window opening on the south elevation, infill the former opening with stucco, and add a new wood landing and steps.
- Page Reference: a1.3, a2.1, A5.1

Item *6:* Door Leaf Replacements

- Replace a non-original first floor door with a pair of wood and glass doors, and replace two water-damaged third floor doors with new wood and glass doors.
- Page Reference: a1.5, a2.1, a2.2, A5.1

Item *7:* Third Floor Supplemental Guardrail

- Install a contemporary black color metal guardrail behind the existing historic wood railing to meet the required guard height.
- Page Reference: A1.2, a1.5, a2.1, a2.2

IF THIS DOCUMENT IS NOT SIGNED, SEALED, AND DATED, IT MAY NOT BE USED FOR REGULATORY APPROVAL, PERMIT, OR CONSTRUCTION.

© COPYRIGHT 2026 DON B. MCDONALD. NO REPRODUCTION, MODIFICATION, OR DISTRIBUTION OF THESE PLANS OR CONSTRUCTION OF THE INDEPENDENT SIGNATURE IS AUTHORIZED WITHOUT A WRITTEN LICENSE AGREEMENT FROM DON B. MCDONALD.

DON B. MCDONALD
ARCHITECTS

JOSKE HOUSE RENOVATION

241 King William
San Antonio Texas 78204

DON B. MCDONALD ARCHITECT
2121 NORTH MAIN AVENUE
SAN ANTONIO, TEXAS 78212
(210) 735-9722

REVISIONS DATE

JOB NO. 26JOS
DRAWN: MH
CHECKED: CB

G1.1
11/12/2026

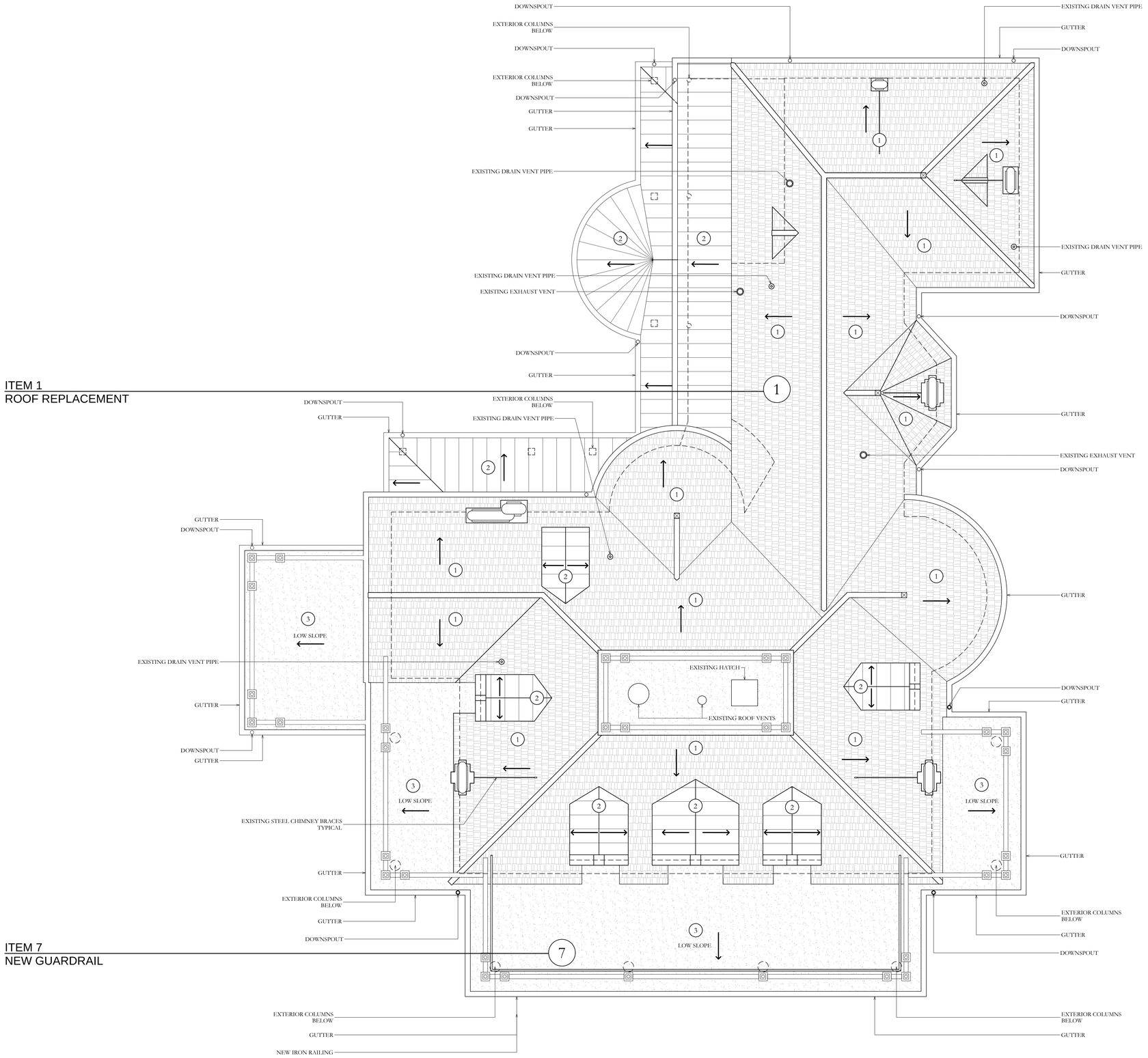

ITEM 1
ROOF REPLACEMENT

ITEM 7
NEW GUARDRAIL

ROOF PLAN LEGEND	
1	NEW WOOD SHINGLES (REPLACE EXISTING) STANDING SEAM ALTERNATE
2	NEW STANDING SEAM METAL (REPLACE EXISTING)
3	NEW TPO (ON TOP OF EXISTING FLAT METAL)

1 Roof Plan

Scale: 1/4"=1'-0"

NORTH

IF THIS DOCUMENT IS NOT SIGNED, SEALED, AND DATED, IT MAY NOT BE USED FOR REGULATORY APPROVAL, PERMIT OR CONSTRUCTION.

© COPYRIGHT 2026 DON B. MCDONALD. NO REPRODUCTION, MODIFICATION, OR DISTRIBUTION OF THESE PLANS OR ASSOCIATED DRAWINGS AND SPECIFICATIONS HEREIN IS AUTHORIZED WITHOUT A WRITTEN LICENSE AGREEMENT FROM DON B. MCDONALD.

DON B. MCDONALD
ARCHITECTS

JOSKE HOUSE RENOVATION
241 King William
San Antonio Texas 78204

DON B. MCDONALD ARCHITECT
2121 NORTH MAIN AVENUE
SAN ANTONIO, TEXAS 78212
(210) 735-9722

REVISIONS DATE

JOB NO. 25JOS
DRAWN: BB
CHECKED: CB

A1.2

11/12/2026

ITEM 5
RELOVATION OF HISTORIC DOOR ASSEMBLY

ITEM 2
EXITING PORCH ENCLOSURE

ITEM 2
EXITING PORCH ENCLOSURE

ITEM 5
RELOVATION OF HISTORIC DOOR ASSEMBLY

ITEM 6
DOOR LEAF REPLACEMENTS

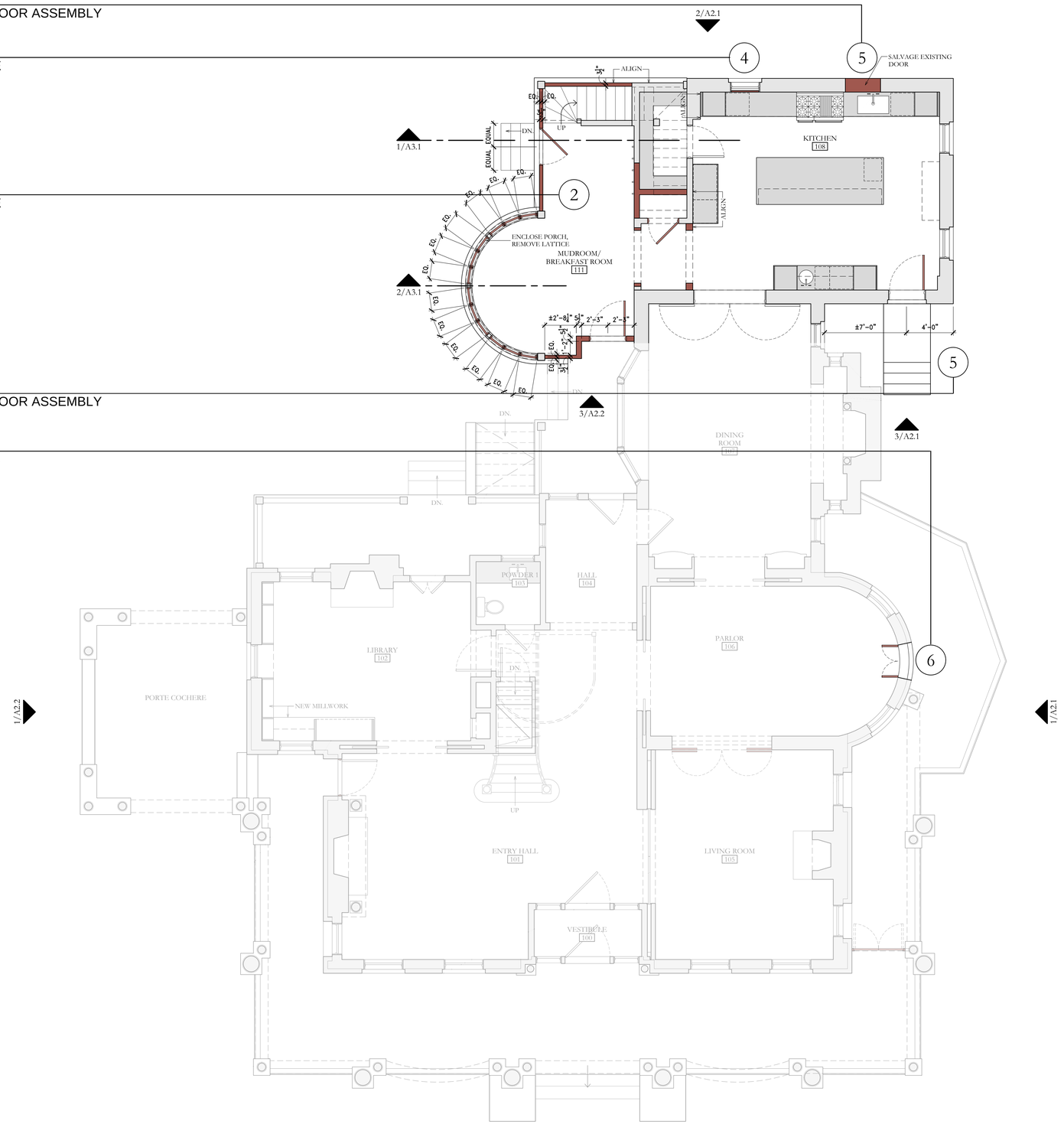

WALL LEGEND	
WALLS	
	EXISTING WALL
	NEW WALL

1 Floor Plan - First Floor

Scale: 1/4"=1'-0"

NORTH

IF THIS DOCUMENT IS NOT SIGNED, SEALED, AND DATED, IT MAY NOT BE USED FOR REGULATORY APPROVAL, PERMIT, OR CONSTRUCTION.

© COPYRIGHT 2026 DON B. MCDONALD. NO REPRODUCTION, MODIFICATION, OR DISTRIBUTION OF THESE PLANS OR CONSTRUCTION OF THE PROPERTY DEPICTED HEREIN IS AUTHORIZED WITHOUT A WRITTEN LICENSE AGREEMENT FROM DON B. MCDONALD.

DON B. MCDONALD
ARCHITECTS

JOSKE HOUSE RENOVATION
241 King William
San Antonio Texas 78204

DON B. MCDONALD ARCHITECT
2121 NORTH MAIN AVENUE
SAN ANTONIO, TEXAS 78212
(210) 735-9722

REVISIONS DATE

JOB NO. 26JOS
DRAWN: JT, MH
CHECKED: CB

A1.3
11/12/2026

ITEM 4
NEW WOOD SHUTTERS

ITEM 3
EXISTING PORCH ENCLOSURE

ITEM 4
NEW WOOD SHUTTERS

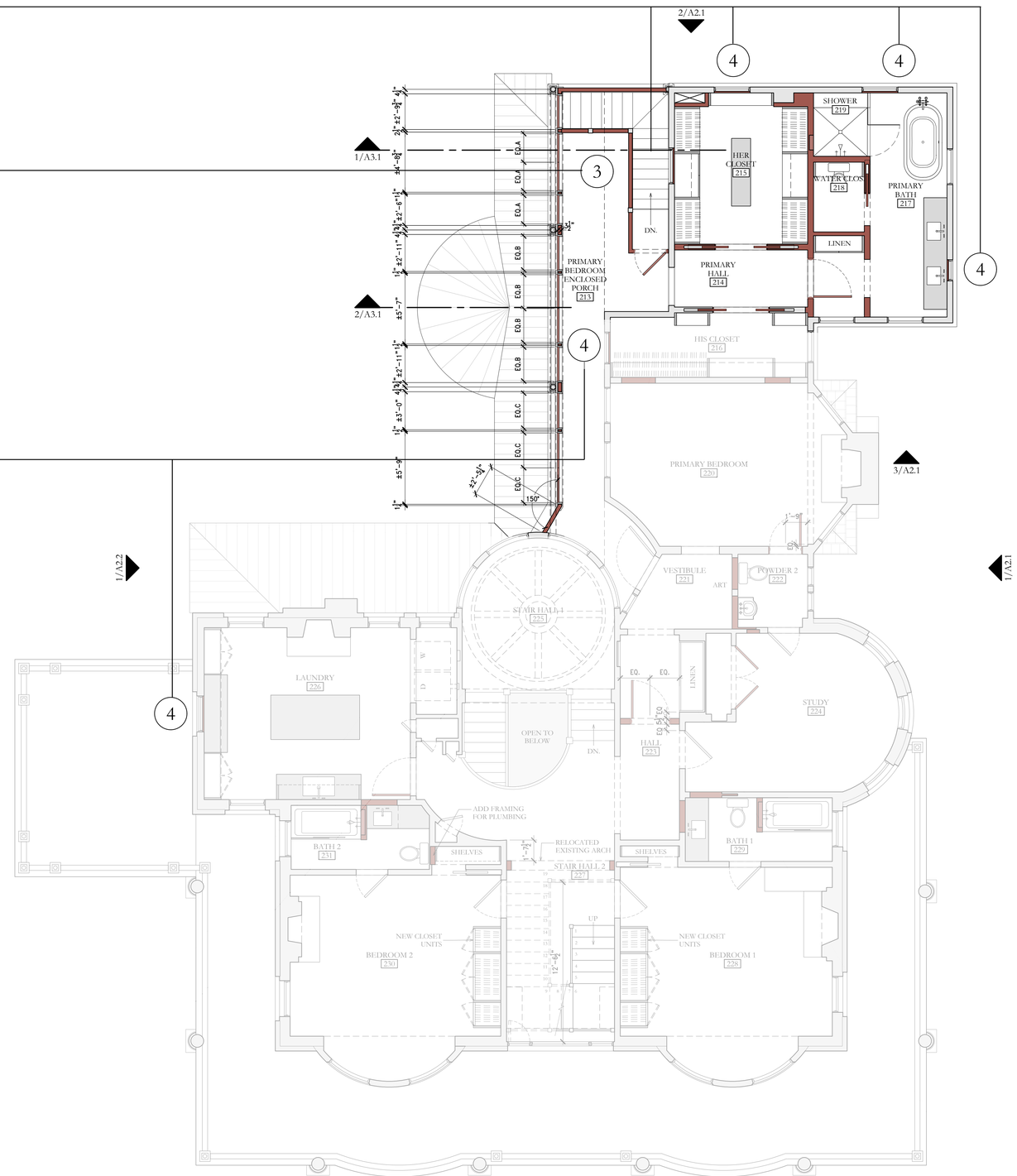

WALL LEGEND	
WALLS	
	EXISTING WALL
	NEW WALL

1 Floor Plan - Second Floor

Scale: 1/4"=1'-0"

NORTH

IF THIS DOCUMENT IS NOT SIGNED, SEALED AND DATED, IT MAY NOT BE USED FOR REGULATORY APPROVAL, PERMIT OR CONSTRUCTION.

© COPYRIGHT 2026 DON B. MCDONALD. NO REPRODUCTION, MODIFICATION, OR DISTRIBUTION OF THESE PLANS OR ELECTRONIC FILES CONTAINED HEREIN IS AUTHORIZED WITHOUT A WRITTEN LICENSE AGREEMENT FROM DON B. MCDONALD.

DON B. MCDONALD
ARCHITECTS

JOSKE HOUSE RENOVATION
241 King William
San Antonio Texas 78204

DON B. MCDONALD ARCHITECT
2121 NORTH MAIN AVENUE
SAN ANTONIO, TEXAS 78212
(210) 735-9722

REVISIONS DATE

JOB NO. 26JOS
DRAWN: JT, MH
CHECKED: CB

A1.4
11/12/2026

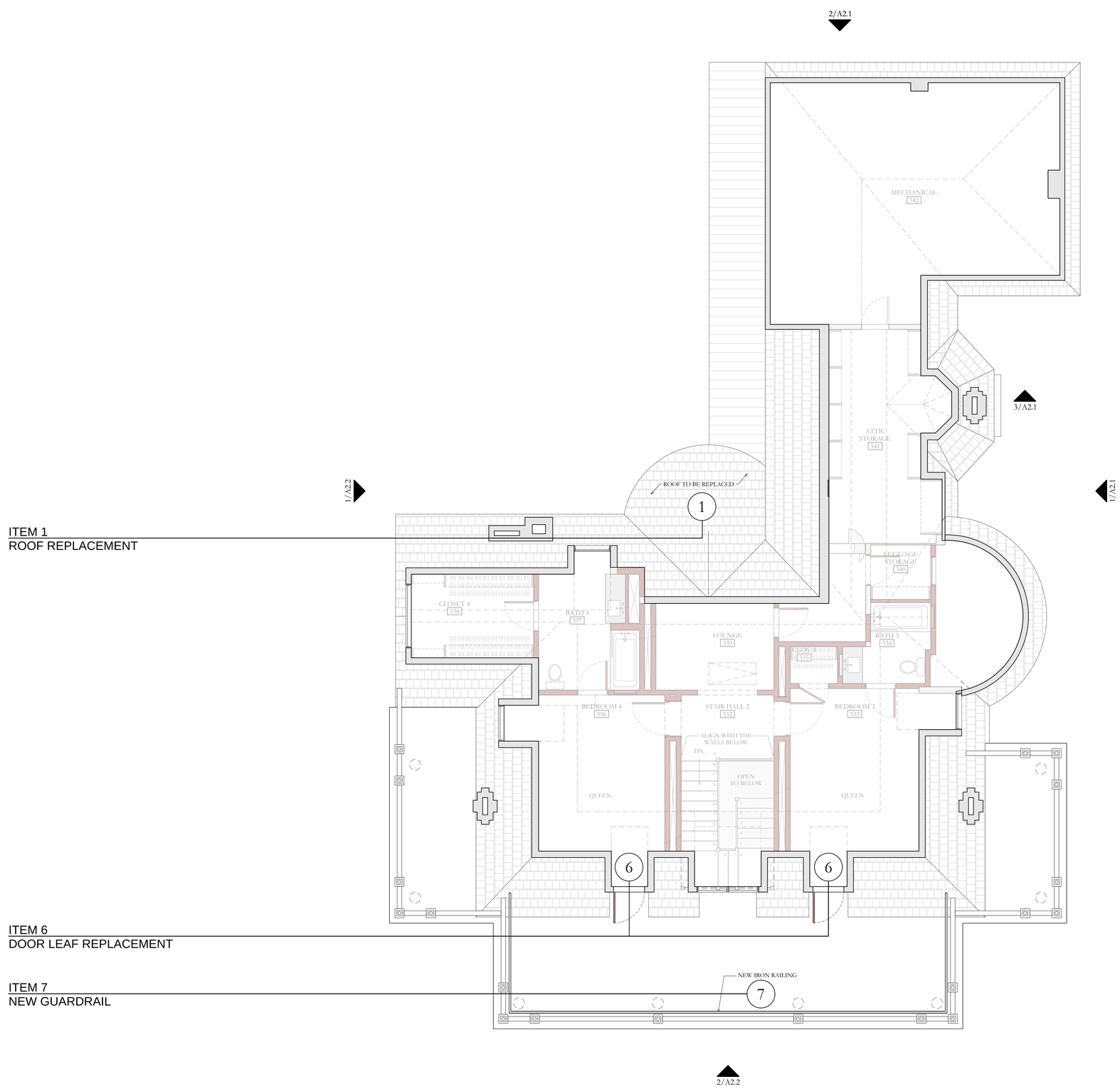

ITEM 1
ROOF REPLACEMENT

ITEM 6
DOOR LEAF REPLACEMENT

ITEM 7
NEW GUARDRAIL

WALL LEGEND	
WALLS	
	EXISTING WALL
	NEW WALL

1 Floor Plan - Attic

Scale: 1/4"=1'-0"

NORTH

IF THIS DOCUMENT IS NOT SIGNED, SEALED, AND DATED, IT MAY NOT BE USED FOR REGULATORY APPROVAL, PERMIT OR CONSTRUCTION.

© COPYRIGHT 2026 DON B. MCDONALD.
NO REPRODUCTION, MODIFICATION, OR DISTRIBUTION OF THESE PLANS OR PORTIONS OF THESE PLANS IN ANY FORM HEREIN IS AUTHORIZED WITHOUT A WRITTEN LICENSE AGREEMENT FROM DON B. MCDONALD.

DON B. MCDONALD
ARCHITECTS

JOSKE HOUSE RENOVATION
241 King William
San Antonio, Texas 78204

DON B. MCDONALD ARCHITECT
2121 NORTH MAIN AVENUE
SAN ANTONIO, TEXAS 78212
(210) 735-9722

REVISIONS DATE

JOB NO. 25JOS
DRAWN: JT, MH
CHECKED: CB

A1.5
11/12/2026

ITEM 1
ROOF REPLACEMENT

ITEM 4
NEW WOOD SHUTTERS

ITEM 3
EXISTING PORCH ENCLOSURE

ITEM 2
EXISTING PORCHE ENCLOSURE

ITEM 5
RELOCATION OF HISTORIC DOOR ASSEMBLY



2 North Building Elevation

Scale: 1/4"=1'-0"

ITEM 1
ROOF REPLACEMENT

ITEM 7
NEW GUARDRAIL

ITEM 4
NEW WOOD SHUTTERS

ITEM 6
DOOR LEAF REPLACEMENTS

ITEM 5
RELOCATION OF HISTORIC DOOR ASSEMBLY



1 East Building Elevation

Scale: 1/4"=1'-0"



3 South Building Elevation

Scale: 1/4"=1'-0"

IF THIS DOCUMENT IS NOT SIGNED, SEALED, AND DATED, IT MAY NOT BE USED FOR REGULATORY APPROVAL, PERMIT OR CONSTRUCTION.

© COPYRIGHT 2026 DON B. MCDONALD. NO REPRODUCTION, MODIFICATION, OR DISTRIBUTION OF THESE PLANS OR ASSOCIATED DRAWINGS AND SPECIFICATIONS HEREIN IS AUTHORIZED WITHOUT A WRITTEN LICENSE AGREEMENT FROM DON B. MCDONALD.

DON B. MCDONALD
ARCHITECTS

JOSKE HOUSE RENOVATION

241 King William
San Antonio Texas 78204

DON B. MCDONALD ARCHITECT
2121 NORTH MAIN AVENUE
SAN ANTONIO, TEXAS 78212
(210) 735-9722

REVISIONS	DATE

JOB NO. 26JOS
DRAWN: MH
CHECKED: CB

A2.1

11/12/2026

ITEM 1
ROOF REPLACEMENT

ITEM 6
DOOR LEAF REPLACEMENTS

ITEM 7
NEW GUARDRAIL



2 South Building Elevation

Scale: 1/4"=1'-0"

ITEM 7
NEW GUARDRAIL

ITEM 1
ROOF REPLACEMENT

ITEM 4
NEW WOOD SHUTTERS

ITEM 3
EXISTING PORCH

ITEM 2
EXISTING PORCH

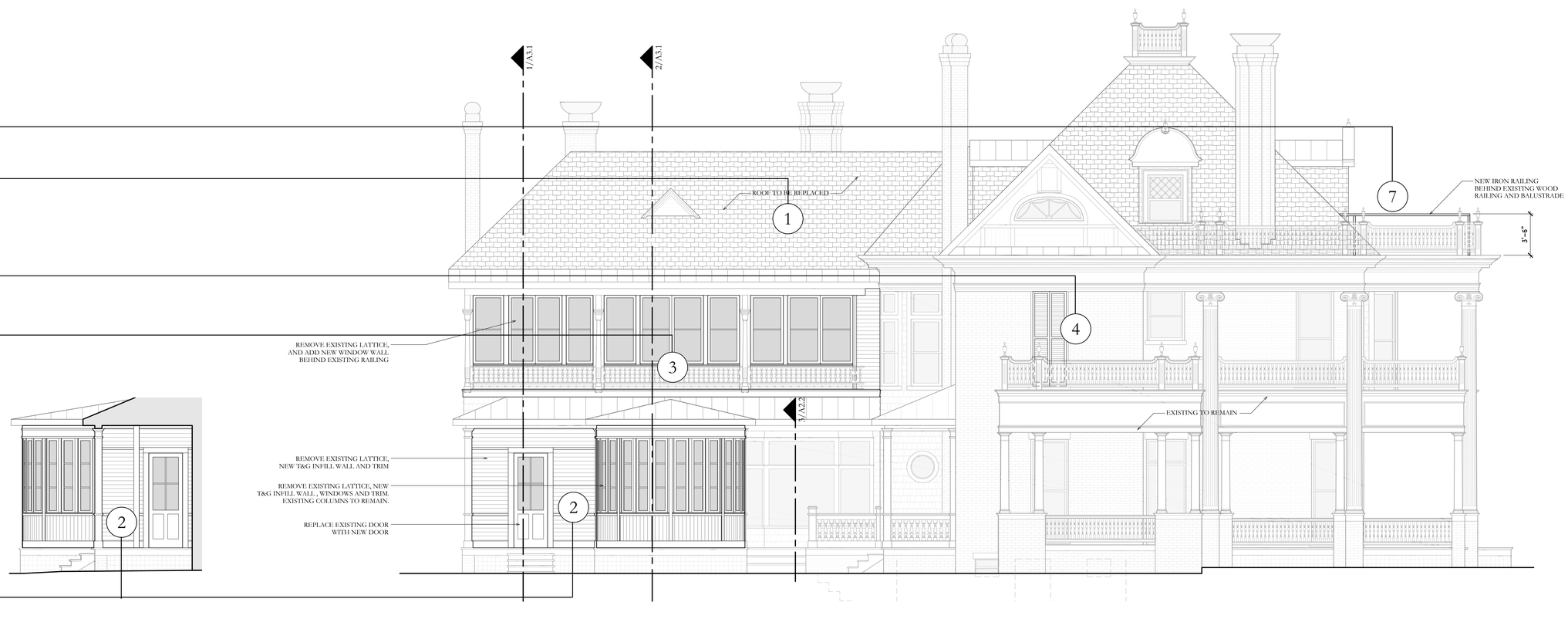

3 South Building Section/Elevation

Scale: 1/4"=1'-0"

1 West Building Elevation

Scale: 1/4"=1'-0"

IF THIS DOCUMENT IS NOT SIGNED, SEALED AND DATED, IT MAY NOT BE USED FOR REGULATORY APPROVAL, PERMIT OR CONSTRUCTION.

© COPYRIGHT 2026 DON B. MCDONALD.
NO REPRODUCTION, MODIFICATION, OR DISTRIBUTION OF THESE PLANS OR ASSOCIATED DRAWINGS AND SPECIFICATIONS HEREIN IS AUTHORIZED WITHOUT A WRITTEN LICENSE AGREEMENT FROM DON B. MCDONALD.

DON B. MCDONALD
ARCHITECTS

JOSKE HOUSE RENOVATION
241 King William
San Antonio Texas 78204

DON B. MCDONALD ARCHITECT
2121 NORTH MAIN AVENUE
SAN ANTONIO, TEXAS 78212
(210) 735-9722

REVISIONS DATE

JOB NO. 26JOS
DRAWN: MH
CHECKED: CB

A2.2

11/12/2026

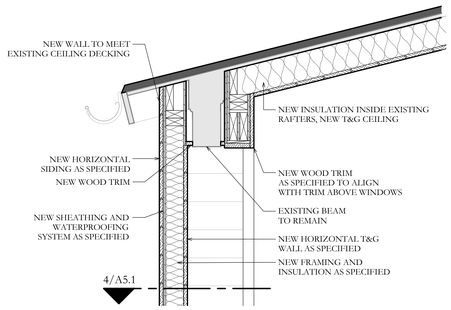

3 Wall Section - Enclosed Porch

Scale: 1"=1'-0"

2 Wall Section - Enclosed Porch, Breakfast Room

Scale: 1"=1'-0"

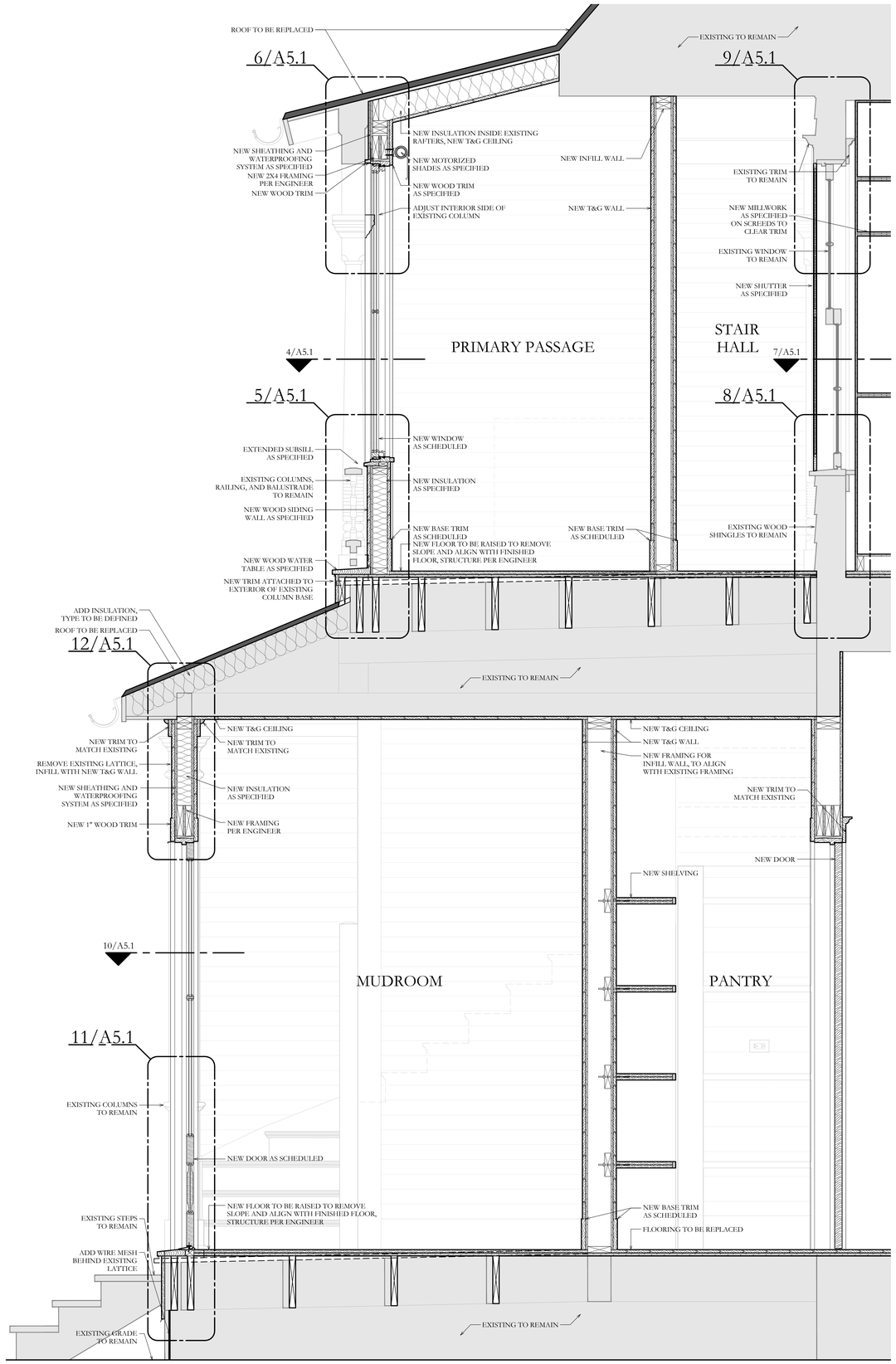

1 Wall Section - Enclosed Porch, Mudroom

Scale: 1"=1'-0"

IF THIS DOCUMENT IS NOT SIGNED, SEALED, AND DATED, IT MAY NOT BE USED FOR REGULATORY APPROVAL, PERMIT OR CONSTRUCTION.

© COPYRIGHT 2026 DON B. MCDONALD. NO REPRODUCTION, MODIFICATION, OR DISTRIBUTION OF THESE PLANS OR ELECTRONIC FILES SHALL BE MADE HEREIN IN AUTHORIZED WITHOUT A WRITTEN LICENSE AGREEMENT FROM DON B. MCDONALD.

DON B. MCDONALD
ARCHITECTS

JOSKE HOUSE RENOVATION

241 King William
San Antonio Texas 78204

DON B. MCDONALD ARCHITECT
2121 NORTH MAIN AVENUE
SAN ANTONIO, TEXAS 78212
(210) 735-9722

REVISIONS	DATE

JOB NO. 26JOS
DRAWN: MH
CHECKED: CB

A3.1

11/12/2026

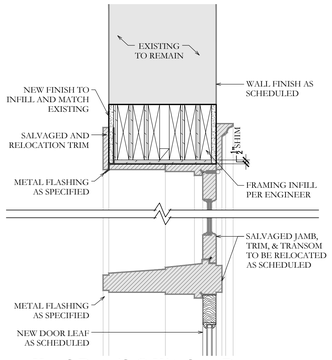

15 Head Detail @ Kitchen Door
@ Kitchen

Scale: 1 1/2"=1'-0"

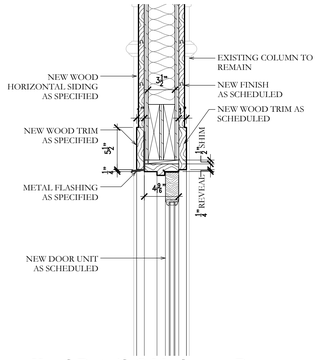

12 Head Detail @ Mudroom Door
@ Mudroom

Scale: 1 1/2"=1'-0"

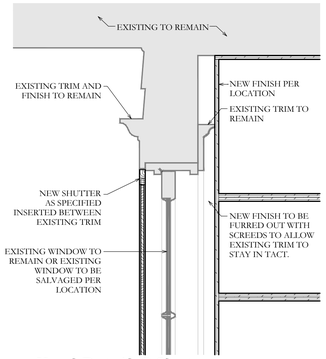

9 Head Detail @ Shutter
@ Primary Suite Her Closet

Scale: 1 1/2"=1'-0"

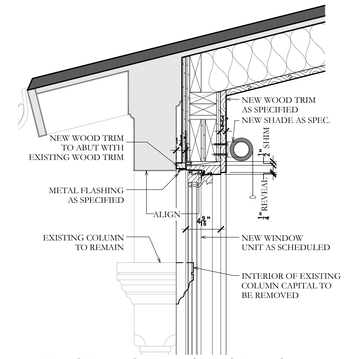

6 Head Detail @ Enclosed Porch
@ Primary Suite

Scale: 1 1/2"=1'-0"

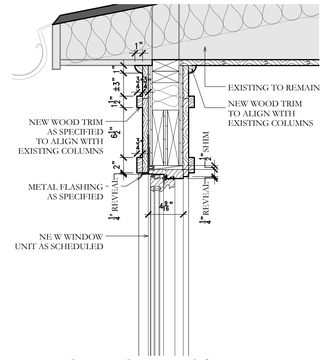

3 Head Detail @ Breakfast Room
@ Breakfast Room

Scale: 1 1/2"=1'-0"

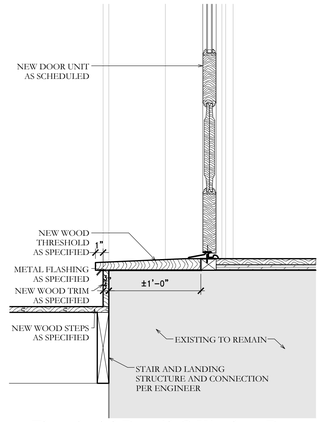

14 Threshold Detail @ Kitchen Door
@ Kitchen

Scale: 1 1/2"=1'-0"

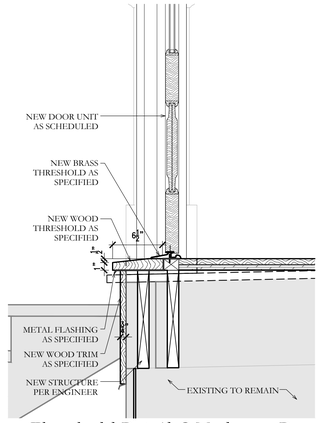

11 Threshold Detail @ Mudroom Door
@ Mudroom

Scale: 1 1/2"=1'-0"

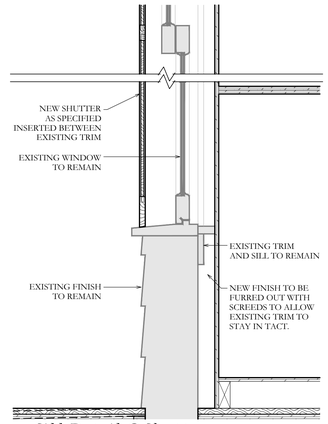

8 Sill Detail @ Shutter
@ Primary Suite Her Closet

Scale: 1 1/2"=1'-0"

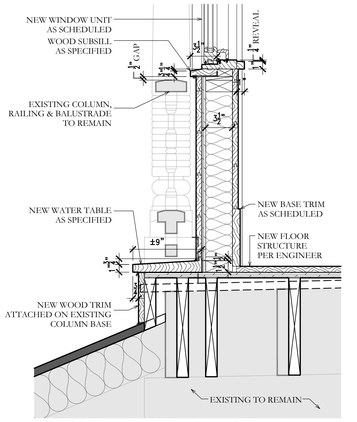

5 Sill Detail @ Enclosed Porch
@ Primary Suite

Scale: 1 1/2"=1'-0"

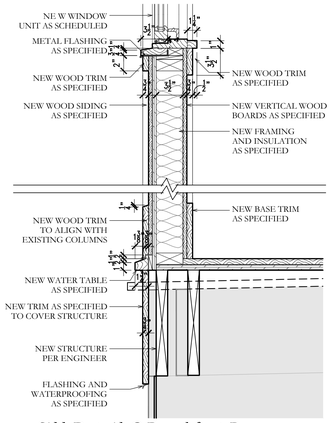

2 Sill Detail @ Breakfast Room
@ Breakfast Room

Scale: 1 1/2"=1'-0"

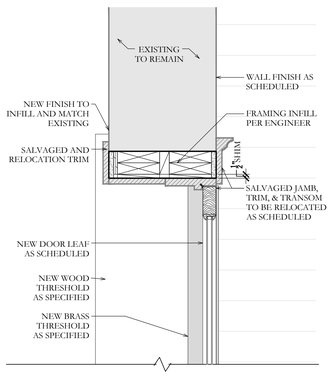

13 Jamb Detail @ Kitchen Door
@ Kitchen

Scale: 1 1/2"=1'-0"

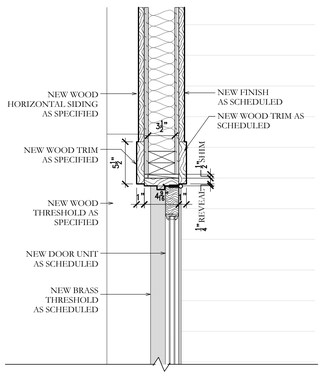

10 Jamb Detail @ Mudroom Door
@ Mudroom

Scale: 1 1/2"=1'-0"

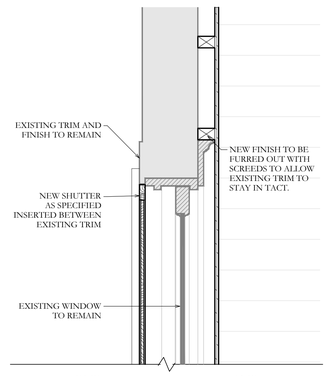

7 Jamb Detail @ Shutter
@ Primary Suite Her Closet

Scale: 1 1/2"=1'-0"

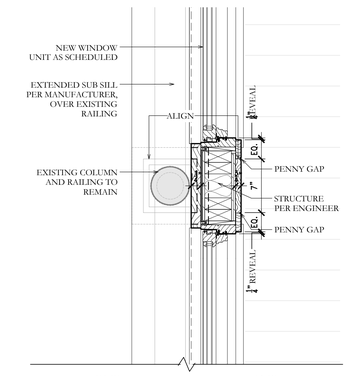

4 Jamb Detail @ Enclosed Porch
@ Primary Suite

Scale: 1 1/2"=1'-0"

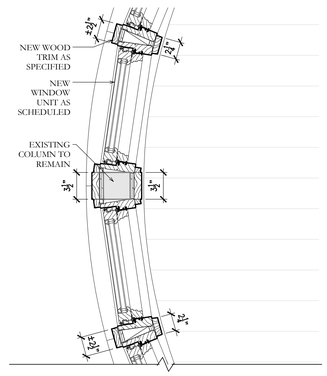

1 Jamb Detail @ Breakfast Room
@ Breakfast Room

Scale: 1 1/2"=1'-0"

IF THIS DOCUMENT IS NOT SIGNED, SEALED AND DATED, IT MAY NOT BE USED FOR REGULATORY APPROVAL, PERMIT OR CONSTRUCTION.

© COPYRIGHT 2026 DON B. MCDONALD. NO REPRODUCTION, MODIFICATION, OR DISTRIBUTION OF THESE PLANS OR ELECTRONIC FILES CONTAINED THEREIN IS AUTHORIZED WITHOUT A WRITTEN LICENSE AGREEMENT FROM DON B. MCDONALD.

DON B. MCDONALD
ARCHITECTS

DON B. MCDONALD ARCHITECT
2121 NORTH MAIN AVENUE
SAN ANTONIO, TEXAS 78212
(210) 735-9722

JOSKE HOUSE RENOVATION

241 King William
San Antonio Texas 78204

JOB NO. 26JOS
DRAWN: MH
CHECKED: CB

A5.1

11/12/2026